HSF

TECHNICAL SPECS:
Current Rating: 1.0AMP
Contact Resistance: 10m Ω Max
Dielectric Strength: Min 500VRMS
Mechanical Life: Min 500 cycles
Mating Pin: ø0.38 to ø0.50mm
Forces: (polished steel gauge ø0.41mm)
Insertion: 150g Max/Pin, Withdrawal: 30g Min/Pin
Operation Temperature: −40°C to +105°C

Sleeve: Brass CuZn36Pb3(C36000),Sn over Ni
Contact Clip(6 finger): BeCu(C17200),Au or Sn over Ni
Insulator Material: PPS+30%G.F(UL94V−0)

Recommended P.C.B Layout(Top Side)
(PCB BOARD TOLERANCE±0.05)

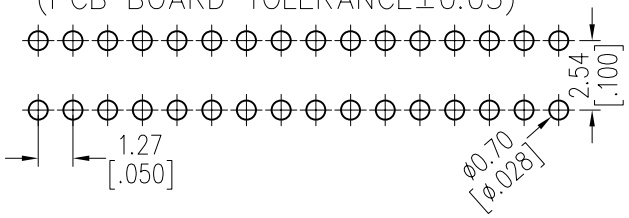

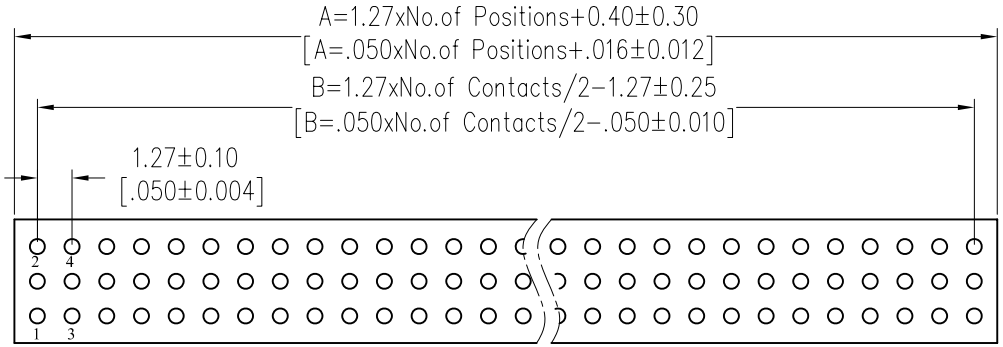

Ordering Information

3525-382 XX S XX 060 X 1

- No. of Pin: 2~50PIN
- Contact Plating: S0=Gold Flash/Tin, S3=10u"Gold/Tin, S4=15u"Gold/Tin, S5=30u"Gold/Tin, SN=Tin
- Packing: A=Tray, T=Tube

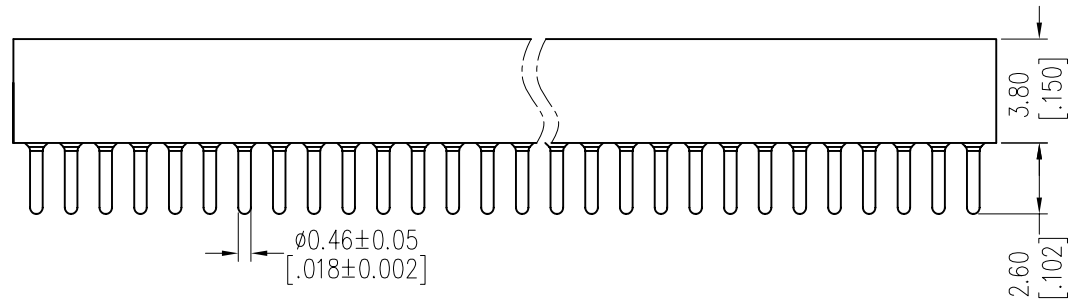

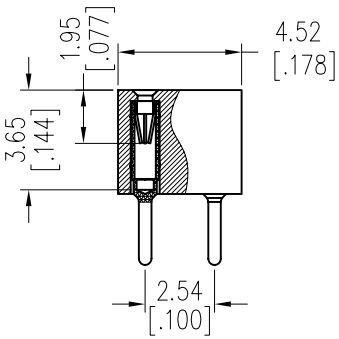

Item	Pitch	Mating
Standard	1.27X2.54	3515
Alternate		

REV	DATE	MODIFICATION DESCRIPTION	CHANGE
A0	2012/10/17	NEW	------

OPERATION	
X.X	±0.40
X.XX	±0.25
X.XXX	±0.15
Angle	± 3°
DIM	TOL

DRAW	JYHuang	DATE	2012/10/17
CHECK		DATE	
APPROVE		DATE	

SCALE	FIT
UNIT	mm
SIZE	A4
SHEET	1/1
PROJ.	

PART NO. 3525-382XXSXX060X1

TITLE: 1.27x2.54mm MACHINED FEMALE HEADER DUAL ROW 180° Pin Length 6.0mm

Customer NO.